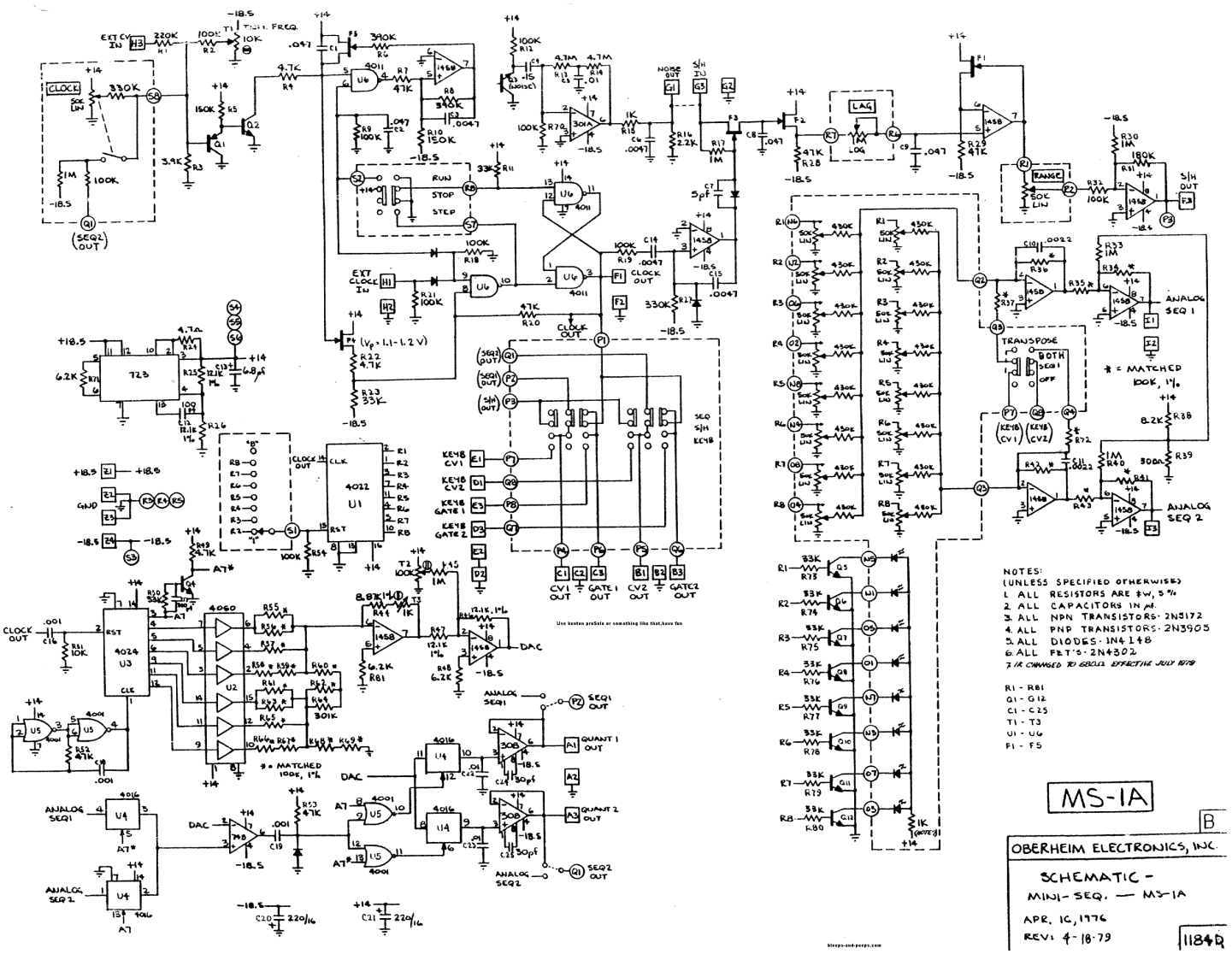
NOTES:
(UNLESS SPECIFIED OTHERWISE)
1. ALL RESISTORS ARE ¼W, 5%
2. ALL CAPACITORS IN µf.
3. ALL NPN TRANSISTORS: 2N5172
4. ALL PNP TRANSISTORS: 2N3905
5. ALL DIODES: 1N4148
6. ALL FET'S: 2N4302
7. IC CHANGED TO 6800 EFFECTIVE JULY 1979
R1 - R81
Q1 - Q12
C1 - C25
T1 - T3
U1 - U6
F1 - F5
MS-1A
B
OBERHEIM ELECTRONICS, INC.
SCHEMATIC -
MINI-SEQ. — MS-1A
APR. 16, 1976
REV: 4-18-79
1184R
* = MATCHED 100K, 1%
TRANSPOSE
BOTH
SEQ 1
OFF
RANGE
LAG
CLOCK
RUN
STOP
STEP
EXT CLOCK IN
CLOCK OUT
NOISE OUT
S/H IN
S/H OUT
ANALOG SEQ 1
ANALOG SEQ 2
SEQ S/H
KEYB CV1
KEYB CV2
KEYB GATE 1
KEYB GATE 2
CV1 OUT
GATE 1 OUT
CV2 OUT
GATE 2 OUT
SEQ1 OUT
SEQ2 OUT
QUANT 1 OUT
QUANT 2 OUT
DAC
GND
723
4011
4022
4024
4060
4016
1458
301A
308
748
4001
bleeps-and-peeps.com